EPL185

ELECTRIC PALLET TRUCK 1.8T

1800 kg | 115 mm | 48 V Li-Ion

Ideal for warehouses, retail, and logistics environments, the EPL185 is designed for operations requiring both high load capacity and maneuverability. Its compact chassis (400 mm fork face length) makes it suitable for confined spaces, while the stabilizing wheels ensure balance even on uneven surfaces. Thanks to optional fork dimensions, larger battery capacities, and additional attachments, it adapts to diverse customer requirements.

SPECIFICATION	REF	UNIT	VALUE
Battery type			Li-Ion
Battery nominal capacity		Ah	20
Battery voltage		V	48
Load capacity	Q	kg	1800
Load centre distance	c	mm	600
Service weight		kg	170
Lift height	h_3	mm	115
Overall length		mm	1550
Overall width	b_1/b_2	mm	610 (695)
Length to face of forks	I_2	mm	400
Fork dimensions	s/e/l	mm	55x150x1150
Turning radius		Wa	1330
Operator type			Pedestrian
Load distance, centre of drive axle to fork		mm	940
Wheelbase		mm	1200
Axle loading, laden front/rear		kg	640/1330

Copyright 2025 EP Equipment. All rights reserved. | Datasheet last updated 2025-11-18

Features

Stable and safe handling

Industrial floating stabilizing wheels come as standard, providing excellent stability and smooth load transport, even on slightly uneven floors.

Advanced battery system

Equipped with a 48V/20Ah removable Li-ion battery with BMS and CAN technology, the EPL185 offers safety, reliability, and the flexibility of optional 30Ah capacity.

Brushless drive technology

The brushless DC motor eliminates the need for carbon brush replacement, improving efficiency and reducing maintenance while ensuring stronger driving power.

Compact & maneuverable

With only 400 mm fork face length and 170 kg service weight, the EPL185 is compact enough for tight aisles but strong enough to handle loads up to 1.8 tons.

Copyright 2025 EP Equipment. All rights reserved. | Datasheet last updated 2025-11-18

VDI Chart

	SPECIFICATION	REF	UNIT	VALUE
1.4	Operator type			Pedestrian
1.5	Load capacity	Q	kg	1800
1.6	Load centre distance	c	mm	600
1.8	Load distance, centre of drive axle to fork		mm	940
1.9	Wheelbase		mm	1200
2.1	Service weight		kg	170
2.2	Axle loading, laden front/rear		kg	640/1330
2.3	Axle loading, unladen front/rear		kg	130/40
3.1	Tyre type			Polyurethane
3.2	Tyre size, front			210x70
3.3	Tyre size, rear			80x60
3.5	Wheels, number front/rear (x=drive wheels)			1x 2/4(1x 2/2)
3.6	Tread width, front	b_{10}	mm	450
3.7	Tread width, rear	b_{11}	mm	390/(535)
4.19	Overall length		mm	1550
4.20	Length to face of forks	I_2	mm	400
4.21	Overall width	b_1/b_2	mm	610 (695)
4.22	Fork dimensions	s/e/l	mm	55x150x1150
4.34.1	Aisle width for pallets 1000×1200 crossways		Ast	2094
4.34.2	Aisle width for pallets 800×1200 lengthways		Ast	2146
4.35	Turning radius		Wa	1330
4.4	Lift height	h_3	mm	115
5.1	Travel speed, laden/unladen		km/h	5/5.5
5.10	Service brake			Electromagnetic
5.2	Lifting speed, laden/unladen		m/s	0.020/0.025
5.3	Lowering speed, laden/unladen		m/s	0.065/0.030
5.8	Max. gradeability, laden/unladen		%	6/16
6.1	Drive motor rating S2 60 min		kW	0.9
6.2	Lift motor rating at S3 15%		kW	0.8
6.4	Battery nominal capacity		Ah	20
6.4	Battery voltage		V	48
6.4.1	Battery type			Li-Ion

Copyright 2025 EP Equipment. All rights reserved. | Datasheet last updated 2025-11-18

	SPECIFICATION	REF	UNIT	VALUE
6.5	Battery weight		kg	14
8.1	Type of drive control			DC
10.5	Steering design			Mechanical
10.7	Sound pressure level at the drivers ear		dB(A)	74

VDI Drawing

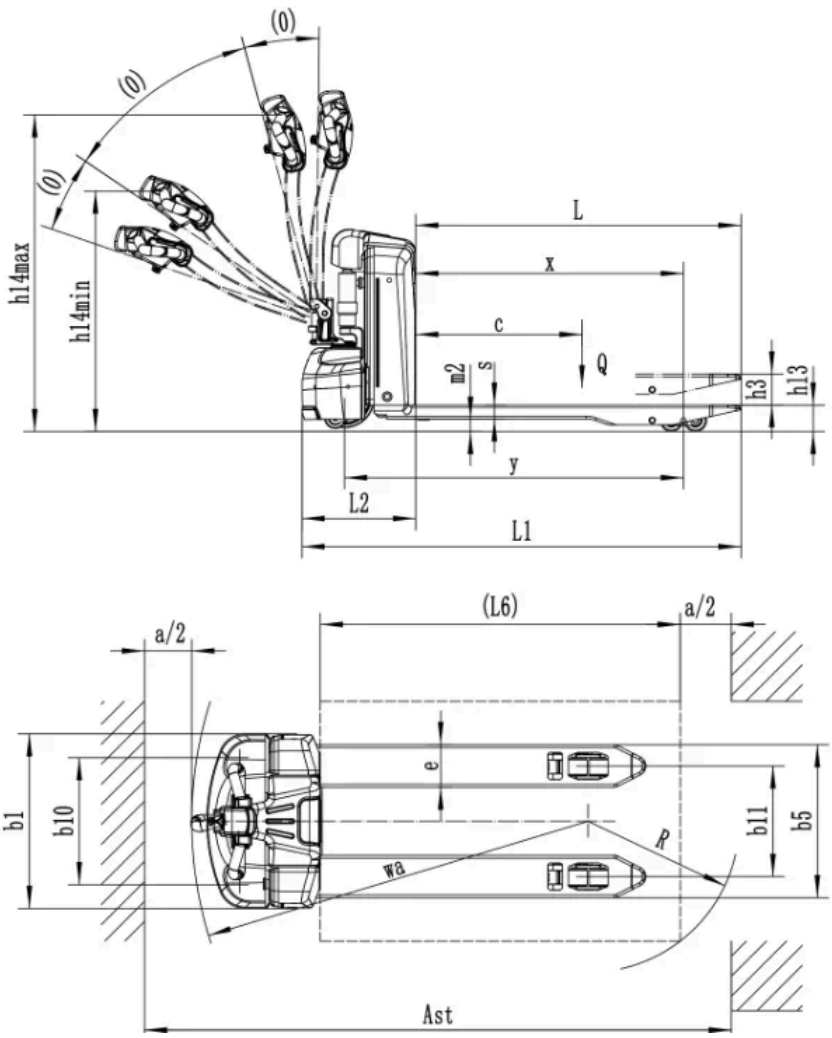

Options

ITEM	OPTIONS (optional items marked in yellow)
Fork dimension	540*1150 | 540*900 | 540*1000 | 540*1220 | 540*1300 | 540*1400 | 540*1500 | 685*900 | 685*1000 | 685*1150 | 685*1220 | 685*1300 | 685*1400 | 685*1500
Fork lowered height	80

Copyright 2025 EP Equipment. All rights reserved. | Datasheet last updated 2025-11-18

ITEM	OPTIONS (optional items marked in yellow)
Load wheel type	Double | Single
Load wheel material	PU
Drive wheel material	PU
Battery capacity	20Ah | 30Ah
Charger	48V-10A integrated | 48V-10A external
Battery display indicator (BDI)	without hourmeter
Buzzer	Yes and not customized
Castor wheels	Yes and not customized | No

Copyright 2025 EP Equipment. All rights reserved. | Datasheet last updated 2025-11-18