EPT20-15ET2H

ALL-TERRAIN ELECTRIC PALLET TRUCK 1.5T

1500 kg | 115 mm | 24 V AGM

The EPT20-15ET2H is ideal for industries where material handling takes place on rough or uneven ground, such as construction sites, outdoor warehouses, and yards. With reinforced drive wheels and a horizontally mounted motor and brake system, it provides protection against dirt and debris while maintaining efficiency. The high ground clearance makes it safer and more stable in rugged conditions.

SPECIFICATION	REF	UNIT	VALUE
Battery type			AGM
Battery nominal capacity		Ah	65
Battery voltage		V	24
Load capacity	Q	kg	1500
Load centre distance	c	mm	600
Service weight		kg	216
Lift height	h_3	mm	115
Overall length		mm	1704
Overall width	b_1/b_2	mm	685
Length to face of forks	I_2	mm	554
Turning radius		Wa	1505
Operator type			Pedestrian
Load distance, centre of drive axle to fork		mm	946
Wheelbase		mm	1301
Axle loading, laden front/rear		kg	724/1468
Axle loading, unladen front/rear		kg	165/40

Copyright 2025 EP Equipment. All rights reserved. | Datasheet last updated 23/10/2025

Features

Enhanced durability

The EPT20-15ET2H is engineered with proven components and a fully sealed structure that protects critical systems from water, dust, and debris. This rugged construction reduces wear and tear, lowers the risk of breakdowns, and ensures that the truck continues to perform reliably even in demanding outdoor environments where conventional pallet trucks would struggle.

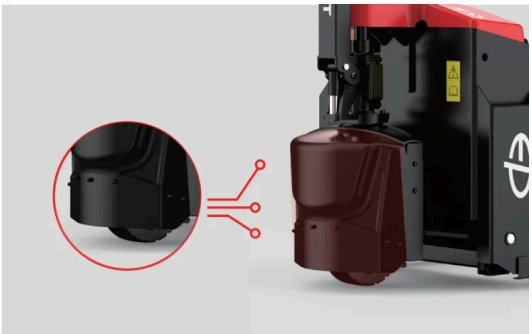

Optimized drive system

Its horizontally mounted motor and brake not only increase ground clearance but also enhance protection against shocks and dirt. Combined with a reinforced rubber drive wheel, the system delivers excellent slip resistance and wear durability. These improvements guarantee safer operation on uneven surfaces and reduce maintenance needs, making it a dependable choice for heavy-duty tasks.

Outdoor-ready design

With increased ground clearance and robust chassis components, the EPT20-15ET2H is specifically adapted for rough or uneven terrain. Operators can use it with confidence in construction sites, yards, and outdoor warehouses. This design expands the application range of the pallet truck beyond traditional smooth-floor environments, giving businesses greater flexibility.

AGM battery with integrated charger

Equipped with a 24V/65Ah AGM battery as standard, the truck supports opportunity charging through its integrated 24V-10A charger, making it simple and convenient to keep powered throughout the day. For operations requiring longer runtime, an 85Ah battery option is available, ensuring the truck adapts easily to both light-duty and intensive outdoor shifts without performance loss.

Copyright 2025 EP Equipment. All rights reserved. | Datasheet last updated 23/10/2025

VDI Chart

	SPECIFICATION	REF	UNIT	VALUE
1.4	Operator type			Pedestrian
1.5	Load capacity	Q	kg	1500
1.6	Load centre distance	c	mm	600
1.8	Load distance, centre of drive axle to fork		mm	946
1.9	Wheelbase		mm	1301
2.1	Service weight		kg	216
2.2	Axle loading, laden front/rear		kg	724/1468
2.3	Axle loading, unladen front/rear		kg	165/40
3.1	Tyre type			Rubber/PU
3.2	Tyre size, front			210x70
3.3	Tyre size, rear			80x61 / 105x88
3.5	Wheels, number front/rear (x=drive wheels)			1x — /4
3.6	Tread width, front	b_{10}	mm	-
3.7	Tread width, rear	b_{11}	mm	410 (535)
4.19	Overall length		mm	1704
4.20	Length to face of forks	I_2	mm	554
4.21	Overall width	b_1/b_2	mm	685
4.34.1	Aisle width for pallets 1000×1200 crossways		Ast	2307
4.34.2	Aisle width for pallets 800×1200 lengthways		Ast	2179
4.35	Turning radius		Wa	1505
4.4	Lift height	h_3	mm	115
5.1	Travel speed, laden/unladen		km/h	4 / 4.5
5.10	Service brake			Electromagnetic
5.2	Lifting speed, laden/unladen		m/s	0.027 / 0.038
5.3	Lowering speed, laden/unladen		m/s	0.059/0.039
5.8	Max. gradeability, laden/unladen		%	5 / 16
6.1	Drive motor rating S2 60 min		kW	0.75
6.2	Lift motor rating at S3 15%		kW	0.8
6.4	Battery nominal capacity		Ah	65
6.4	Battery voltage		V	24
6.4.1	Battery type			AGM
6.5	Battery weight		kg	34

Copyright 2025 EP Equipment. All rights reserved. | Datasheet last updated 23/10/2025

	SPECIFICATION	REF	UNIT	VALUE
8.1	Type of drive control			DC
10.5	Steering design			Mechanical
10.7	Sound pressure level at the drivers ear		dB(A)	74

VDI Drawing

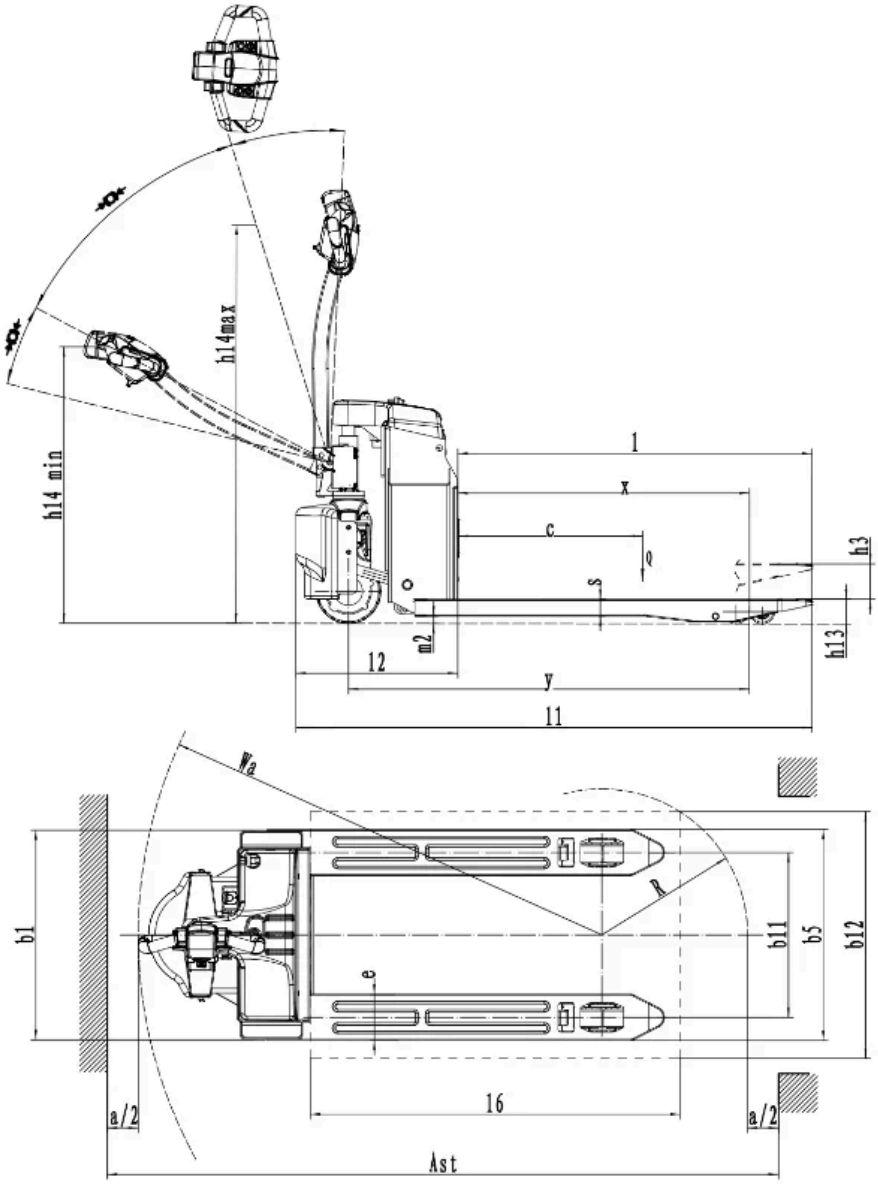

Copyright 2025 EP Equipment. All rights reserved. | Datasheet last updated 23/10/2025

Options

ITEM	OPTIONS (optional items marked in yellow)
Fork dimension	560*1150 | 560*800 | 560*1000 | 560*1220 | 560*1300 | 560*1400 | 560*1500 | 560*1600 | 560*1800 | 560*2000 | 685*800 | 685*1000 | 685*1150 | 685*1220 | 685*1300 | 685*1400 | 685*1500 | 685*1600 | 685*1800 | 685*2000
Fork lowered height	80
Load wheel type	Double | Single
Load wheel material	PU
Drive wheel material	Rubber | PU
Battery capacity	65Ah AGM | 85Ah AGM
Charger	24V-10A
Battery display indicator (BDI)	With hourtime
Buzzer	Yes and not customized
Turtle speed	Yes and not customized
Castor wheels	No | Yes and not customized

Copyright 2025 EP Equipment. All rights reserved. | Datasheet last updated 23/10/2025