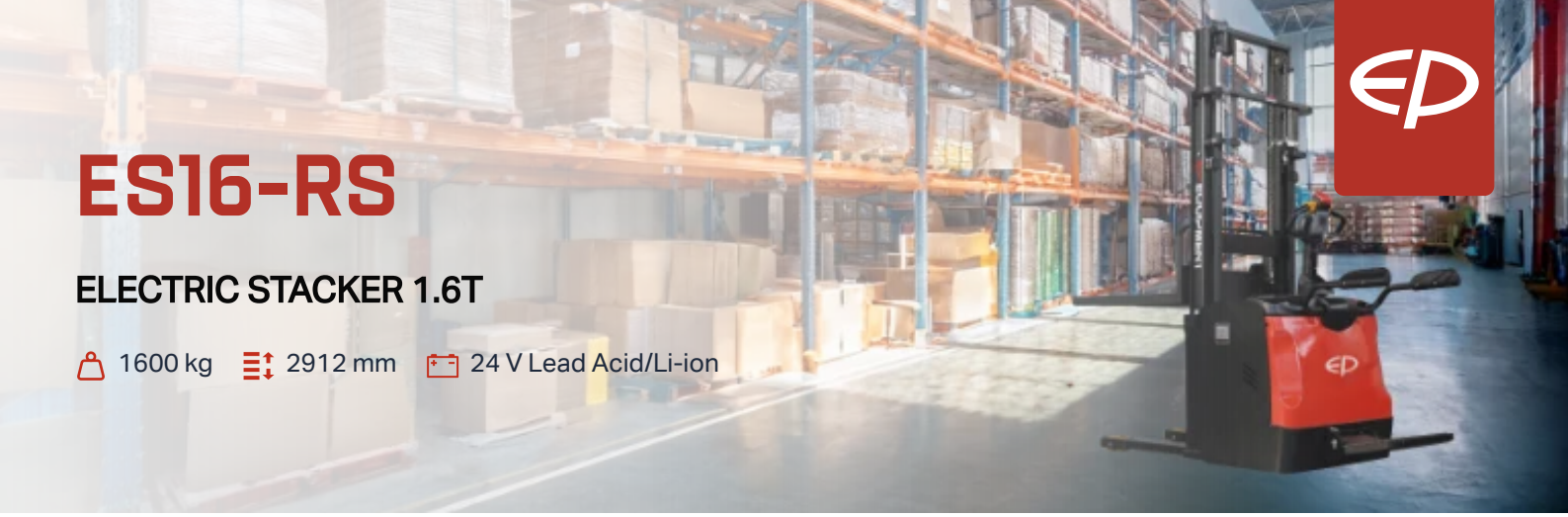

ES16-RS

ELECTRIC STACKER 1.6T

1600 kg | 2912 mm | 24 V Lead Acid/Li-ion

The ES16-RS is suitable for warehouses, distribution centers, and manufacturing facilities where stability and efficiency are essential. Its high-strength chassis and mast options allow it to handle intensive stacking cycles, while electronic steering and dual monitoring systems support safe operation. Optional features such as Li-ion batteries, remote monitoring, and side supports make the ES16-RS adaptable to diverse operational needs.

SPECIFICATION	REF	UNIT	VALUE
Battery type			Lead Acid/Li-ion
Battery nominal capacity		Ah	210
Battery voltage		V	24
Load capacity	Q	kg	1600
Load centre distance	c	mm	600
Service weight		kg	1240
Retracted mast height	h_1	mm	2020
Lift height	h_3	mm	2912
Height, mast extended	h_4	mm	3465
Overall length		mm	2035
Overall width	b_1/b_2	mm	850
Length to face of forks	I_2	mm	885
Fork dimensions	s/e/l	mm	60×190×1150
Turning radius		Wa	1730/2090
Operator type			Pedestrian
Load distance, centre of drive axle to fork		mm	671

Copyright 2025 EP Equipment. All rights reserved. | Datasheet last updated 2025-11-14

Features

Strong and reliable design

A high-strength chassis and mast channels ensure stability and durability, making the ES16-RS suitable for demanding stacking operations up to 5.5 meters.

Operator-focused comfort

The foldable platform with reduced vibration and protection arms improves operator comfort during long shifts, while electronic steering reduces fatigue in tight spaces.

Advanced safety functions

Features like automatic low-speed mode above 720 mm, anti-rolling back brake, and dual hydraulic monitoring provide enhanced safety during daily operation.

Flexible power and options

Equipped with a standard 24V/210Ah battery, the ES16-RS also supports Li-ion options (150Ah or 205Ah). Optional add-ons include remote monitoring, proportional lift, overhead guard, and side support systems.

Copyright 2025 EP Equipment. All rights reserved. | Datasheet last updated 2025-11-14

VDI Chart

	SPECIFICATION	REF	UNIT	VALUE
1.4	Operator type			Pedestrian
1.5	Load capacity	Q	kg	1600
1.6	Load centre distance	c	mm	600
1.8	Load distance, centre of drive axle to fork		mm	671
1.9	Wheelbase		mm	1375
2.1	Service weight		kg	1240
2.2	Axle loading, laden front/rear		kg	960/1880
2.3	Axle loading, unladen front/rear		kg	860/380
3.1	Tyre type			Polyurethane
3.2	Tyre size, front			Φ230×75
3.3	Tyre size, rear			Φ85×70
3.5	Additional wheels (castor wheels)			Φ130×55
3.5	Wheels, number front/rear (x=drive wheels)			1x+1/4
3.6	Tread width, front	b_{10}	mm	574
3.7	Tread width, rear	b_{11}	mm	380/495
4.10	Height of wheel arms		mm	\
4.12	Tow coupling height		mm	N/A
4.15	Lowered height			88
4.19	Overall length		mm	2035
4.2	Retracted mast height	h_1	mm	2020
4.20	Length to face of forks	I_2	mm	885
4.21	Overall width	b_1/b_2	mm	850
4.22	Fork dimensions	s/e/l	mm	60×190×1150
4.23	A,B Fork carriage class/type A, B			ES16-RS
4.24	Fork carriage width		mm	800
4.25	Distance between fork-arms			570/685
4.26	Distance between wheel arms/loading surfaces			\
4.3	Free lift		mm	100
4.31	Ground clearance, laden, below mast		mm	\
4.32	Ground clearance, centre of wheelbase		mm	28
4.34.1	Aisle width for pallets 1000×1200 crossways		Ast	2605/2965
4.34.2	Aisle width for pallets 800×1200 lengthways		Ast	2575/2935

Copyright 2025 EP Equipment. All rights reserved. | Datasheet last updated 2025-11-14

	SPECIFICATION	REF	UNIT	VALUE
4.35	Turning radius		Wa	1730/2090
4.4	Lift height	h_3	mm	2912
4.4.1	Max lift height			5500
4.5	Height, mast extended	h_4	mm	3465
4.9	Height of tiller handle in drive position min./max.			1150/1480
5.1	Travel speed, laden/unladen		km/h	5.5/6.0
5.10	Service brake			Electromagnetic
5.2	Lifting speed, laden/unladen		m/s	0.13/0.16
5.3	Lowering speed, laden/unladen		m/s	0.30/0.22
5.8	Max. gradeability, laden/unladen		%	8/16
6.1	Drive motor rating S2 60 min		kW	1.6
6.2	Lift motor rating at S3 15%		kW	3.0
6.4	Battery nominal capacity		Ah	210
6.4	Battery voltage		V	24
6.4.1	Battery type			Lead Acid/Li-ion
6.5	Battery weight		kg	200
6.5	Charger output current			Charger output current
6.6	Energy consumption according to DIN EN 16796		kWh/h	0.942 [1)]
6.7	Turnover output according to VDI 2198			Turnover output according to VDI 2198
6.8	Turnover efficiency according to VDI 2198			Turnover efficiency according to VDI 2198
8.1	Type of drive control			AC
10.5	Steering design			Electronic
10.7	Sound pressure level at the drivers ear		dB(A)	74

Copyright 2025 EP Equipment. All rights reserved. | Datasheet last updated 2025-11-14

VDI Drawing

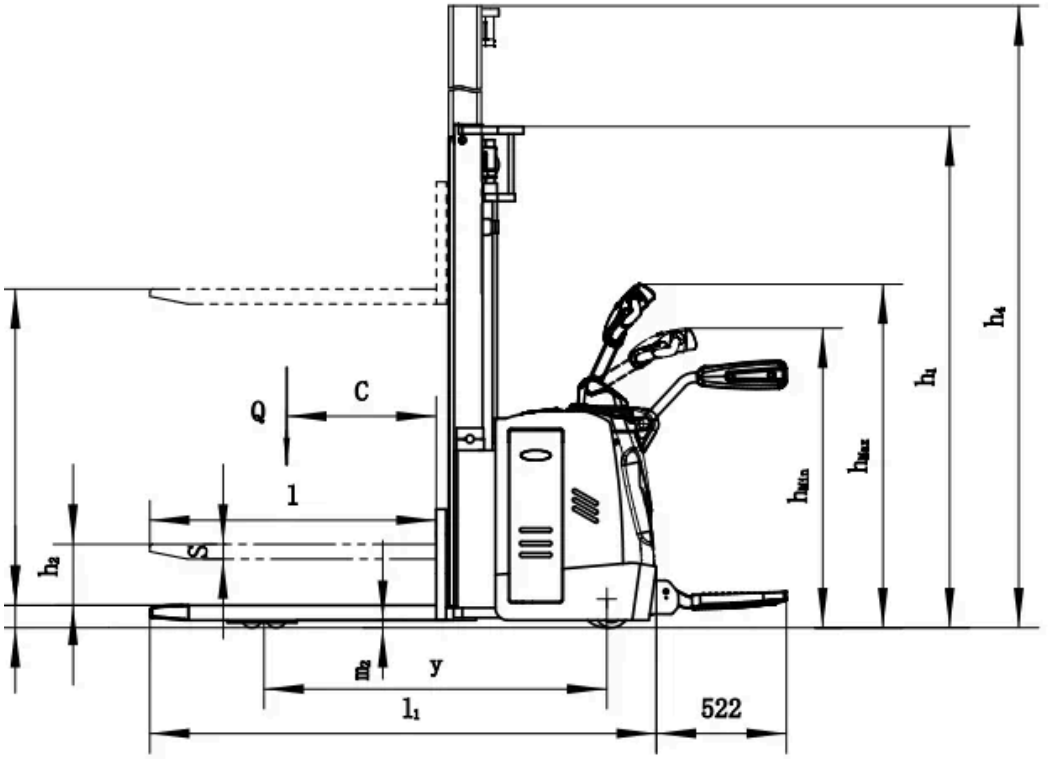

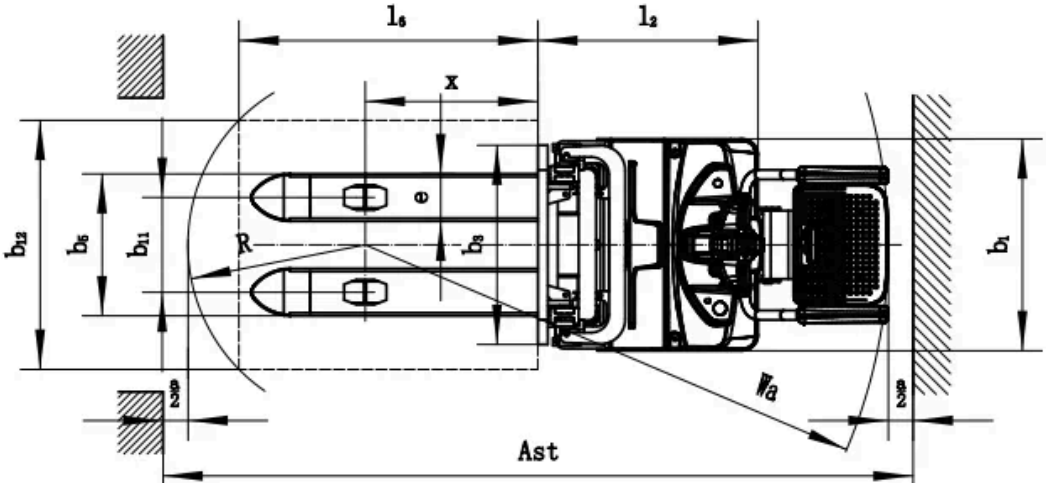

Copyright 2025 EP Equipment. All rights reserved. | Datasheet last updated 2025-11-14

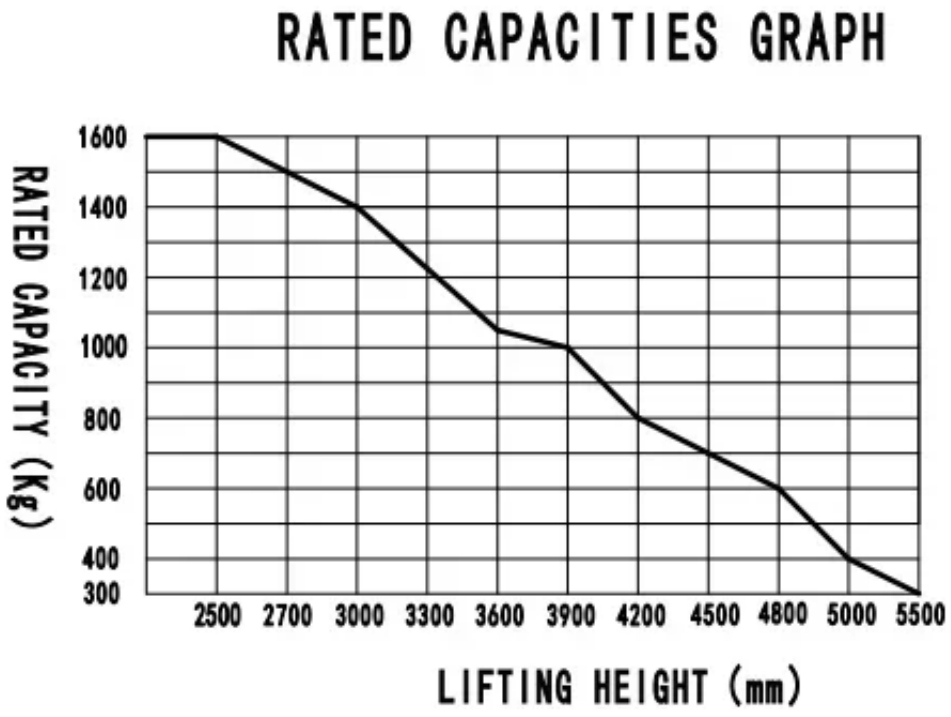

Mast Options

MAST TYPE	LIFT HEIGHT (H3, MM)	MAST LOWERED HEIGHT (H1, MM)	MAST EXTENDED HEIGHT, NO BACKREST (H4, MM)	FREE LIFT HEIGHT, NO BACKREST (H2, MM)
2-Standard Mast	2700	1870	3165	100
2-Standard Mast	3000	2020	3465	100
2-Standard Mast	3300	2170	3765	100
2-Standard Mast	3600	2320	4065	100
2-Standard Mast	3900	2470	4365	100
2-Standard Mast	4170	2600	4625	100
2-Free Mast	2700	1819	3135	1320
2-Free Mast	3000	1969	3435	1470
2-Free Mast	3300	2119	3735	1620
2-Free Mast	4000	1822	4460	1390
3-Free Mast	4500	2022	4960	1590
3-Free Mast	4800	2122	5260	1690

Copyright 2025 EP Equipment. All rights reserved. | Datasheet last updated 2025-11-14

MAST TYPE	LIFT HEIGHT (H3, MM)	MAST LOWERED HEIGHT (H1, MM)	MAST EXTENDED HEIGHT, NO BACKREST (H4, MM)	FREE LIFT HEIGHT, NO BACKREST (H2, MM)
3-Free Mast	5000	2187	5460	1740
3-Free Mast	5300	2287	5760	1840
3-Free Mast	5500	2352	5910	1910

Options

ITEM	OPTIONS (optional items marked in yellow)
Fork dimension	570*1150 | 570*1220 | 685*1150 | 685*1220
Fork lowered height	88
Load wheel type	Double
Load wheel material	PU
Drive wheel material	PU
Battery capacity	210Ah | 280Ah | 345Ah | 150Ah Li-ion | 205Ah Li-ion
Charger	24V-30A External (Lead acid) | 24V-50A External (Lead acid) | 24V-50A External (Li-ion) | 24V-100A External (Li-ion)
Battery display indicator (BDI)	With time (Bluetooth)
Rearview mirror	No | Yes and not customized
Battery side pull function	Yes and not customized
Proportional lift system	No | Yes and not customized
Side supports	Yes and not customized

Copyright 2025 EP Equipment. All rights reserved. | Datasheet last updated 2025-11-14