F3

ELECTRIC PALLET TRUCK 1.5T

1500 kg | 105 mm | 24 V Li-Ion

Designed for logistics centers and transportation hubs, the F3 is ideal for moving goods across intensive shift operations. Its sturdy frame guarantees reliability under heavy use, while the Li-ion plug & play battery supports opportunity charging for continuous availability. The upgraded tiller design reduces strain on operators' hands, and the flip cover ensures battery safety against water ingress, making the F3 a trusted choice for long-term industrial performance.

SPECIFICATION	REF	UNIT	VALUE
Battery type			Li-Ion
Battery nominal capacity		Ah	20
Battery voltage		V	24
Load capacity	Q	kg	1500
Load centre distance	c	mm	600
Service weight		kg	120
Lift height	h_3	mm	105
Overall length		mm	1550
Overall width	b_1/b_2	mm	695/590
Length to face of forks	I_2	mm	400
Fork dimensions	s/e/l	mm	55/150/1150
Turning radius		Wa	1360
Operator type			Pedestrian
Load distance, centre of drive axle to fork		mm	950
Wheelbase		mm	1180
Axle loading, laden front/rear		kg	480/1140

Copyright 2025 EP Equipment. All rights reserved. | Datasheet last updated 2025-11-06

Features

Strong structure & Li-ion heart

The F3 inherits EP's proven EPL153 frame and integrates a plug & play Li-ion battery, ensuring tough performance in demanding logistics environments.

Ergonomic tiller head

The redesigned tiller allows operators to steer with the palm instead of the thumb, reducing strain and improving comfort during long shifts.

Battery flip cover

A protective flip cover safeguards the Li-ion battery from water ingress, enhancing operational safety and extending service life.

Built for logistics

With its 1.5-ton capacity and robust design, the F3 is purpose-built to meet the challenges of transportation in busy logistics centers.

VDI Chart

	SPECIFICATION	REF	UNIT	VALUE
1.4	Operator type			Pedestrian
1.5	Load capacity	Q	kg	1500

Copyright 2025 EP Equipment. All rights reserved. | Datasheet last updated 2025-11-06

	SPECIFICATION	REF	UNIT	VALUE
1.6	Load centre distance	c	mm	600
1.8	Load distance, centre of drive axle to fork		mm	950
1.9	Wheelbase		mm	1180
2.1	Service weight		kg	120
2.2	Axle loading, laden front/rear		kg	480/1140
2.3	Axle loading, unladen front/rear		kg	90/30
3.1	Tyre type			Polyurethane
3.2	Tyre size, front			210x70
3.3	Tyre size, rear			80x60 / 74x88
3.5	Wheels, number front/rear (x=drive wheels)			1x 2/4, 1x 2/2
3.7	Tread width, rear	b_{11}	mm	535/410
4.19	Overall length		mm	1550
4.20	Length to face of forks	I_2	mm	400
4.21	Overall width	b_1/b_2	mm	695/590
4.22	Fork dimensions	s/e/l	mm	55/150/1150
4.24	Fork carriage width		mm	685/560
4.32	Ground clearance, centre of wheelbase		mm	25
4.34.1	Aisle width for pallets 1000×1200 crossways		Ast	2160
4.34.2	Aisle width for pallets 800×1200 lengthways		Ast	2025
4.35	Turning radius		Wa	1360
4.4	Lift height	h_3	mm	105
5.1	Travel speed, laden/unladen		km/h	4/4.5
5.10	Service brake			Electromagnetic
5.2	Lifting speed, laden/unladen		m/s	0.017/0.020
5.3	Lowering speed, laden/unladen		m/s	0.046/0.058
5.8	Max. gradeability, laden/unladen		%	5/16
6.1	Drive motor rating S2 60 min		kW	0.75
6.2	Lift motor rating at S3 15%		kW	0.5
6.4	Battery nominal capacity		Ah	20
6.4	Battery voltage		V	24
6.4.1	Battery type			Li-Ion
6.5	Battery weight		kg	5
10.5	Steering design			Mechanical
10.7	Sound pressure level at the drivers ear		dB(A)	<74

Copyright 2025 EP Equipment. All rights reserved. | Datasheet last updated 2025-11-06

VDI Drawing

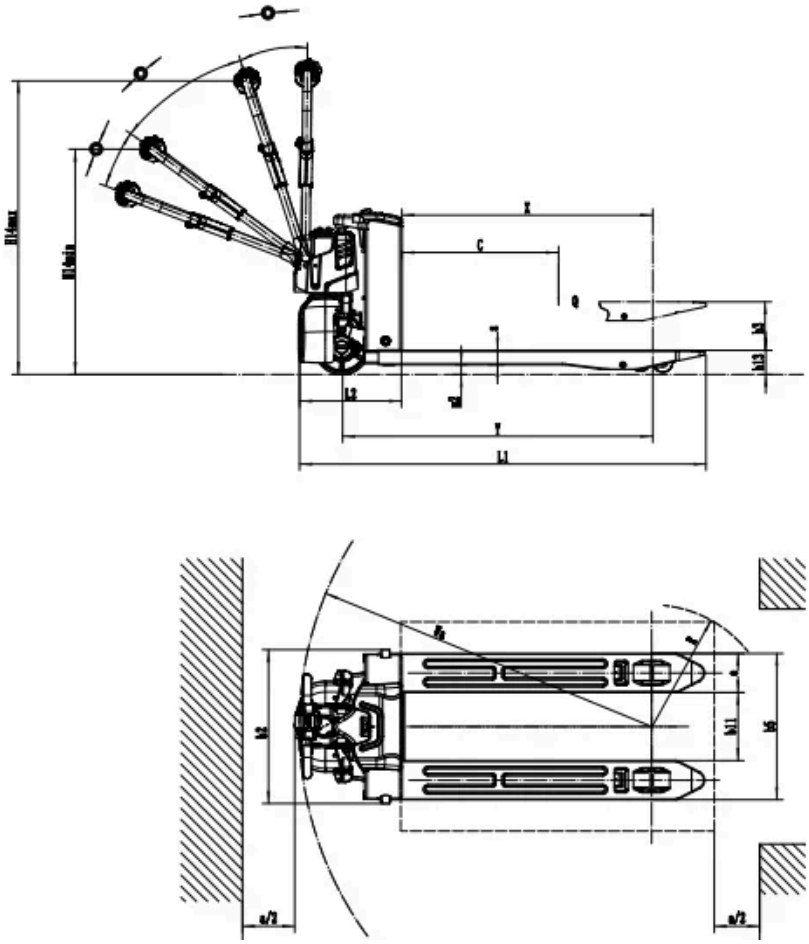

Options

ITEM	OPTIONS (optional items marked in yellow)
Fork dimension	1150x560 | 800×560 | 900×560 | 1000×560 | 1220×560 | 1350×560 | 1500×560 | 800×685 | 900×685 | 1000×685 | 1150×685 | 1220×685 | 1350×685 | 1500×685
Fork lowered height	80
Load wheel type	Double | Single
Handle head type	Hands big handle head | Hands small handle head
Load wheel material	PU
Drive wheel material	PU
Battery capacity	20Ah
Charger	24V-5A external | 24V-10A external
Battery display indicator (BDI)	Without time
Buzzer	Yes and not customized

Copyright 2025 EP Equipment. All rights reserved. | Datasheet last updated 2025-11-06

ITEM	OPTIONS (optional items marked in yellow)
Turtle speed	Yes and not customized
Castor wheels	No | Yes and not customized
Drive assembly	Yes and not customized

Copyright 2025 EP Equipment. All rights reserved. | Datasheet last updated 2025-11-06